JIANGSU CHANGJIANG ELECTRONICS TECHNOLOGY CO., LTD

SOD-123 Plastic-Encapsulate Diodes

MBR0520-MBR0580 Schottky Barrier Diode

SOD-123

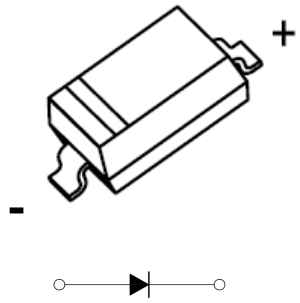

FEATURES

- Lead Free Finish/RoHS Compliant
- Extremely Low Thermal Resistance
- For Surface Mount Application and High Current Capability

MARKING:

MBR0520:R2	MBR0530:R3	MBR0540:R4	MBR0560:R6	MBR0580:R8
R2	R3	R4	R6	R8
R2	R3	R4	R6	R8

The marking bar indicates the cathode
Solid dot = Green molding compound device,if none, the normal device.

Maximum Ratings @T_a=25℃

Parameter	Symbol	MBR 0520	MBR 0530	MBR 0540	MBR 0560	MBR 0580	Unit
Maximum recurrent peak reverse voltage Maximum RMS voltage	V_{RRM} V_{RMS}	20 14	30 21	40 28	60 42	80 56	V
Mean rectifying current	I_O	0.5					A
Non-repetitive Peak forward surge current @t=8.3ms	I_{FSM}	5.5					A
Power Dissipation	P_D	410					mW
Thermal Resistance Junction to Ambient	$R_{\theta JA}$	244					℃/W
Junction temperature	T_j	125					℃
Storage temperature	T_{stg}	-55~+150					℃

ELECTRICAL CHARACTERISTICS

T_a=25℃ unless otherwise specified

Parameter	Symbol	Min.	Typ.	Max.	Unit	Conditions
Forward voltage						
MBR0520	V_F			0.45	V	I_F=500mA
MBR0530				0.55		
MBR0540				0.55		
MBR0560				0.70		
MBR0580				0.80		
Reverse current						
MBR0520	I_R			80	μA	V_R=20V
MBR0530						V_R=30V
MBR0540						V_R=40V
MBR0560						V_R=60V
MBR0580						V_R=80V
Capacitance between terminals	C_T		30		pF	V_R=4V, f=1MHZ

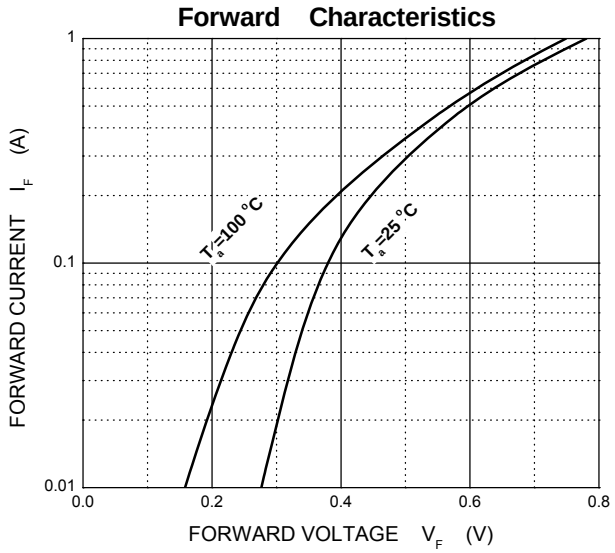
Forward Characteristics
FORWARD CURRENT I_F (A)
FORWARD VOLTAGE V_F (V)
T_a=100 °C
T_a=25 °C
1
0.1
0.01
0.0
0.2
0.4
0.6
0.8

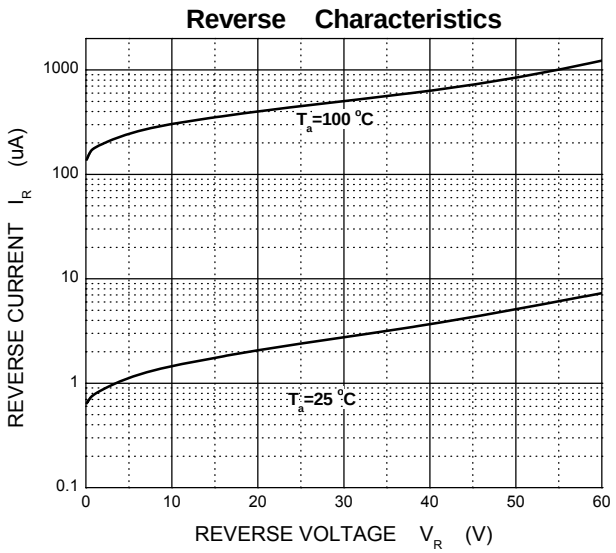
Reverse Characteristics
REVERSE CURRENT I_R (uA)
REVERSE VOLTAGE V_R (V)
T_a=100 °C
T_a=25 °C
1000
100
10
1
0.1
0
10
20
30
40
50
60

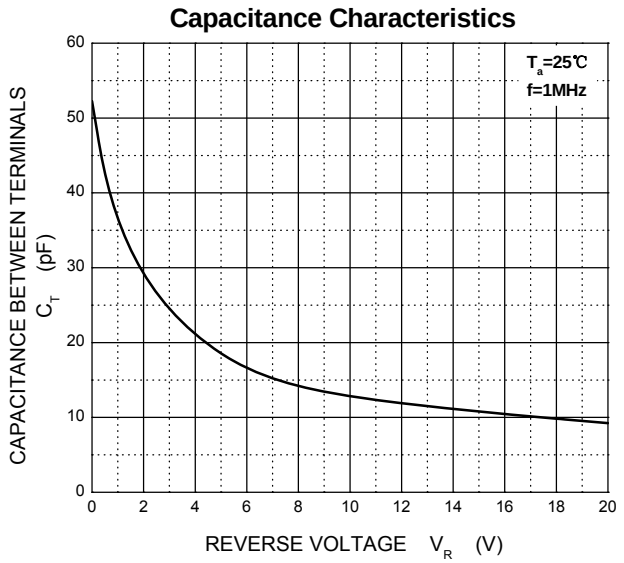
Capacitance Characteristics
CAPACITANCE BETWEEN TERMINALS C_T (pF)
REVERSE VOLTAGE V_R (V)
T_a=25℃
f=1MHz
60
50
40
30
20
10
0
0
2
4
6
8
10
12
14
16
18
20

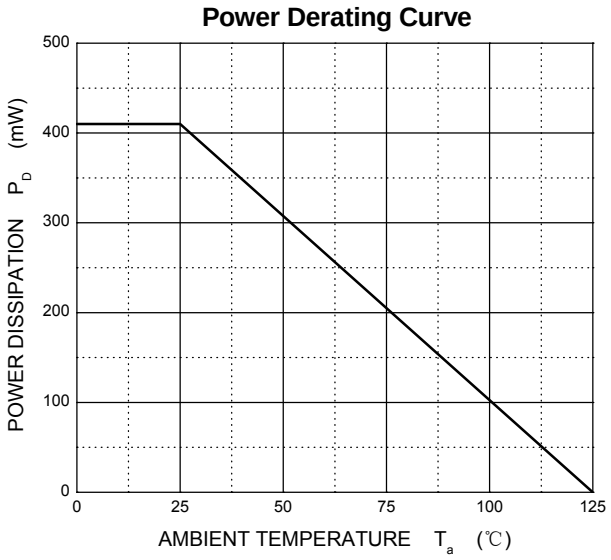
Power Derating Curve
POWER DISSIPATION P_D (mW)
AMBIENT TEMPERATURE T_a (℃)
500
400
300
200
100
0
0
25
50
75
100
125

SOD-123 Package Outline Dimensions

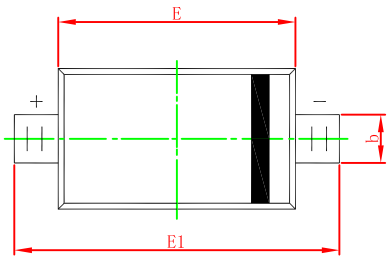

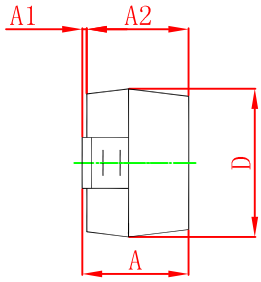

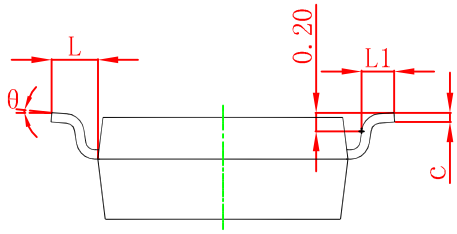

Symbol	Dimensions In Millimeters		Dimensions In Inches	
	Min	Max	Min	Max
A	1.050	1.250	0.041	0.049
A1	0.000	0.100	0.000	0.004
A2	1.050	1.150	0.041	0.045
b	0.450	0.650	0.018	0.026
c	0.080	0.150	0.003	0.006
D	1.500	1.700	0.059	0.067
E	2.600	2.800	0.102	0.110
E1	3.550	3.850	0.140	0.152
L	0.500 REF		0.020 REF	
L1	0.250	0.450	0.010	0.018
θ	0°	8°	0°	8°

SOD-123 Suggested Pad Layout

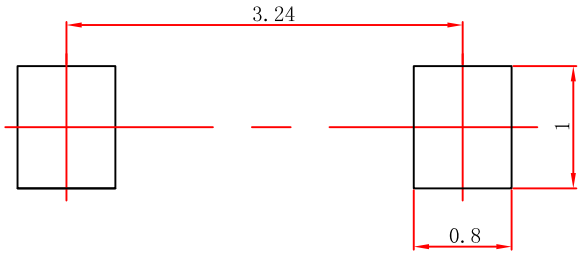

Note:
1.Controlling dimension:in millimeters.
2.General tolerance:± 0.05mm.
3.The pad layout is for reference purposes only.

NOTICE

JCET reserve the right to make modifications,enhancements, improvements, corrections or other changes without further notice to any product herein.JCET does not assume any liability arising out of the application or use of any product described herein.

SOD-123 Embossed Carrier Tape

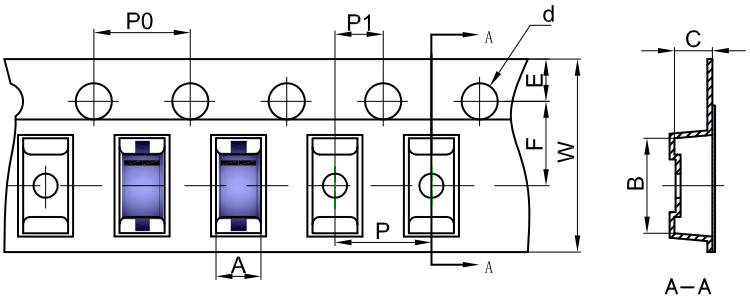

Packaging Description:

SOD-123 parts are shipped in tape. The carrier tape is made from a dissipative (carbon filled) polycarbonate resin. The cover tape is a multilayer film (Heat Activated Adhesive in nature) primarily composed of polyester film, adhesive layer, sealant, and anti-static sprayed agent. These reeled parts in standard option are shipped with 3,000 units per 7" or 17.8cm diameter reel. The reels are clear in color and is made of polystyrene plastic (anti-static coated).

Dimensions are in millimeter										
Pkg type	A	B	C	d	E	F	P0	P	P1	W
SOD-123	1.85	3.95	1.57	Ø1.55	1.75	3.50	4.00	4.00	2.00	8.00

SOD-123 Tape Leader and Trailer

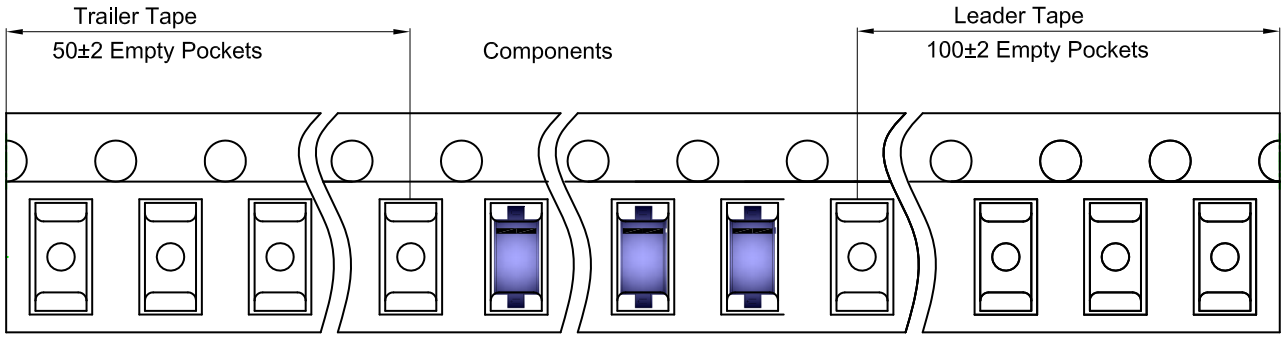

SOD-123 Reel

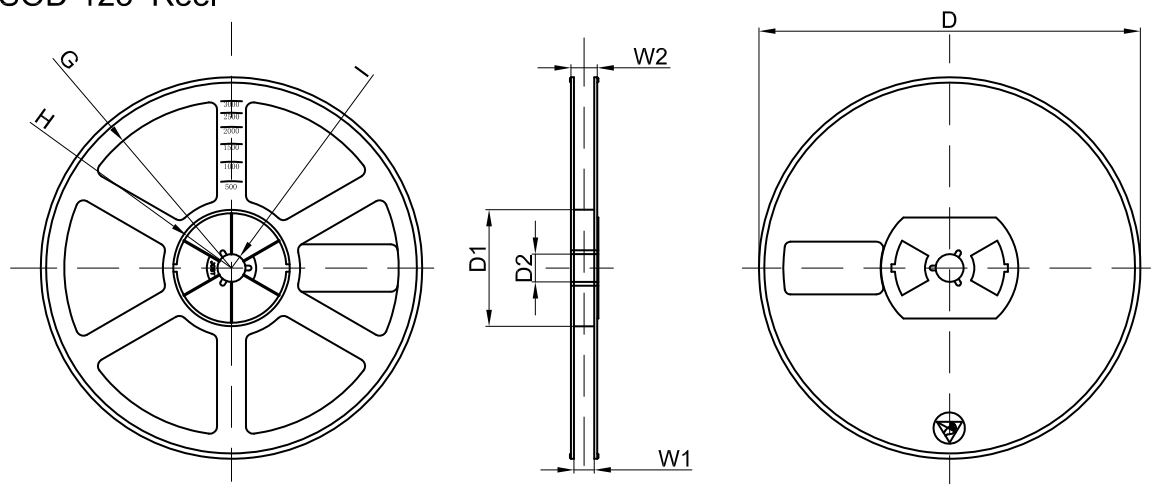

Dimensions are in millimeter								
Reel Option	D	D1	D2	G	H	I	W1	W2
7"Dia	Ø178.00	54.40	13.00	R78.00	R25.60	R6.50	9.50	12.30

REEL	Reel Size	Box	Box Size(mm)	Carton	Carton Size(mm)	G.W.(kg)
3000 pcs	7 inch	45,000 pcs	203×203×195	180,000 pcs	438×438×220	